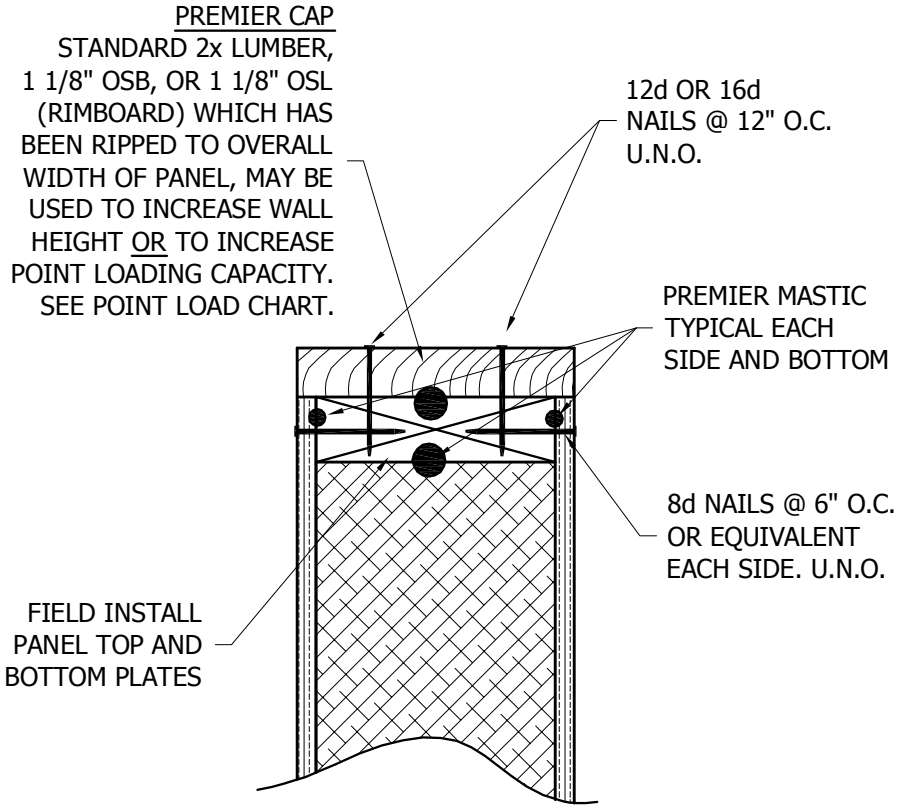Accessory Details: Cap Plate PBS-010