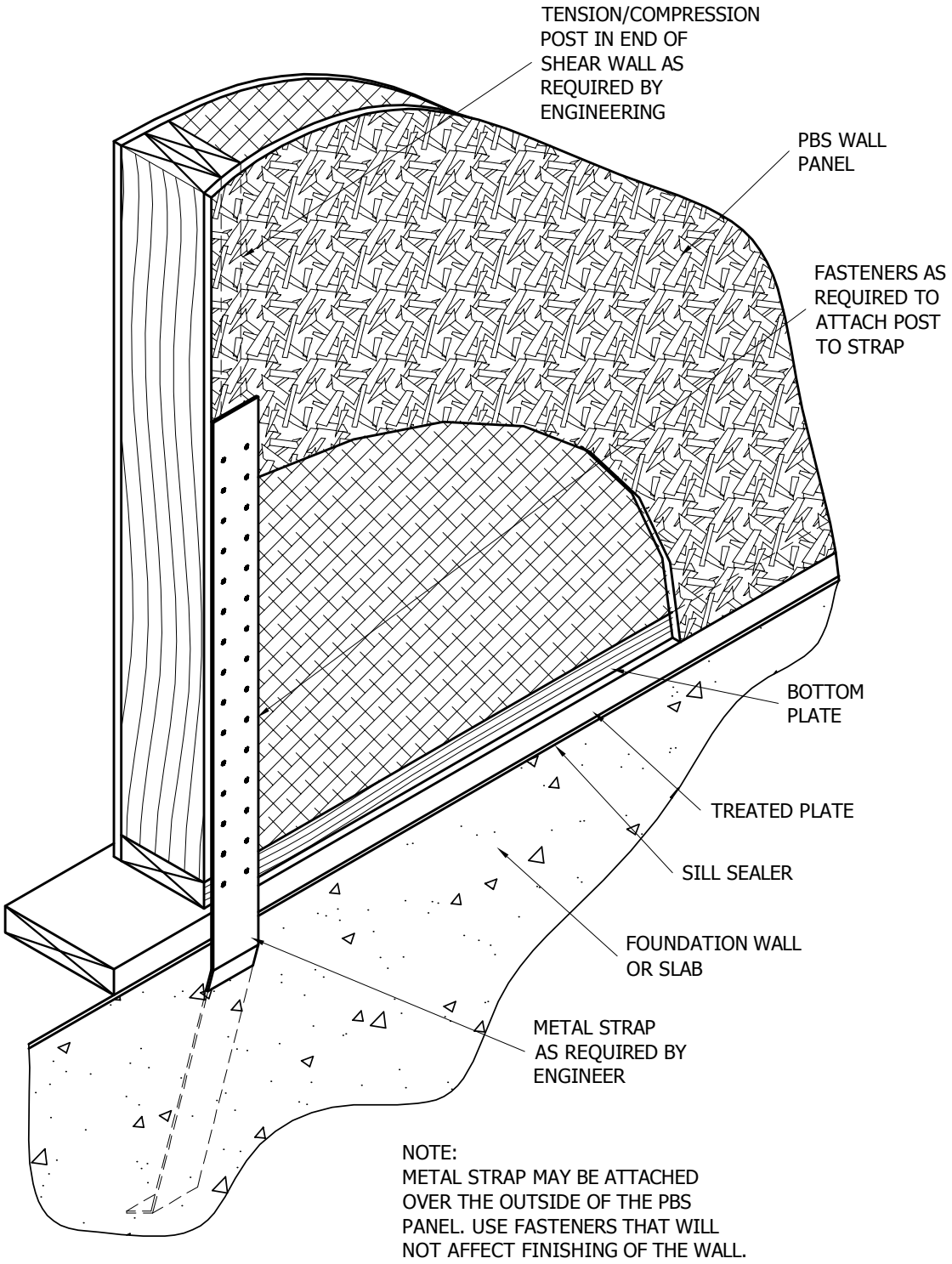Floor Details: Strap Hold Down Connection PBS-105